Power Amplifiers

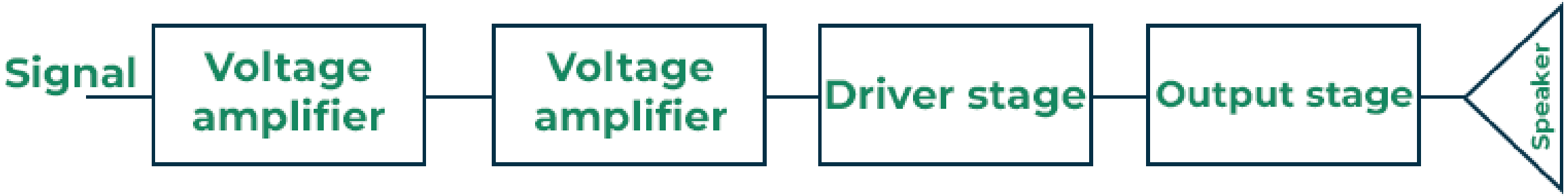

Large signal amplifiers

Large signal amplifiers also known as power amplifiers are capable of providing large amount of power to the load. They are used as last stage in electronic systems. A power amplifier takes the d.c. power supply connected to the output circuit and converts it into a.c. signal power. Output power is controlled by input signal.

Important Features of Power Amplifiers: Some of the features of power amplifiers are
Impedance matching with the load is necessary for delivering max power to the load.
Power transistors are needed. (To withstand large voltages and currents)
Power amplifiers are bulk.

Due to the non–linear characteristics of transistors, Harmonic Distortions are available at the output.

Performance parameters: The performance of power amplifiers are determined by the following points.

1. Circuit efficiency: Also known as conversion efficiency or overall efficiency.

$$\eta = \frac{\text{maximum AC Power O/P}}{\text{DC input power}}$$

2. Distortion: The difference between the output & input of an amplifier is known as distortion. Even though the output is enlarged and faithful reproduction of input but in actual practice there may be differences in the waveforms or frequencies. (1) Harmonic or amplitude distortion – Due to nonlinearity in transistor. (2) Crossover distortion – occurs when transistors not operating in correct phase with each other. 3. Power Dissipation capacity: It's defined as the ability to dissipate the heat by the power transistor. Also known as power rating. During amplification process large current passes through power transistor hence Heat generated. By connecting a metal sheet (Heat sink) power dissipation capability can be increased.

Classification of power amplifiers

These can be categorized on the basis of transistor biasing and the amplitude of the input signal.

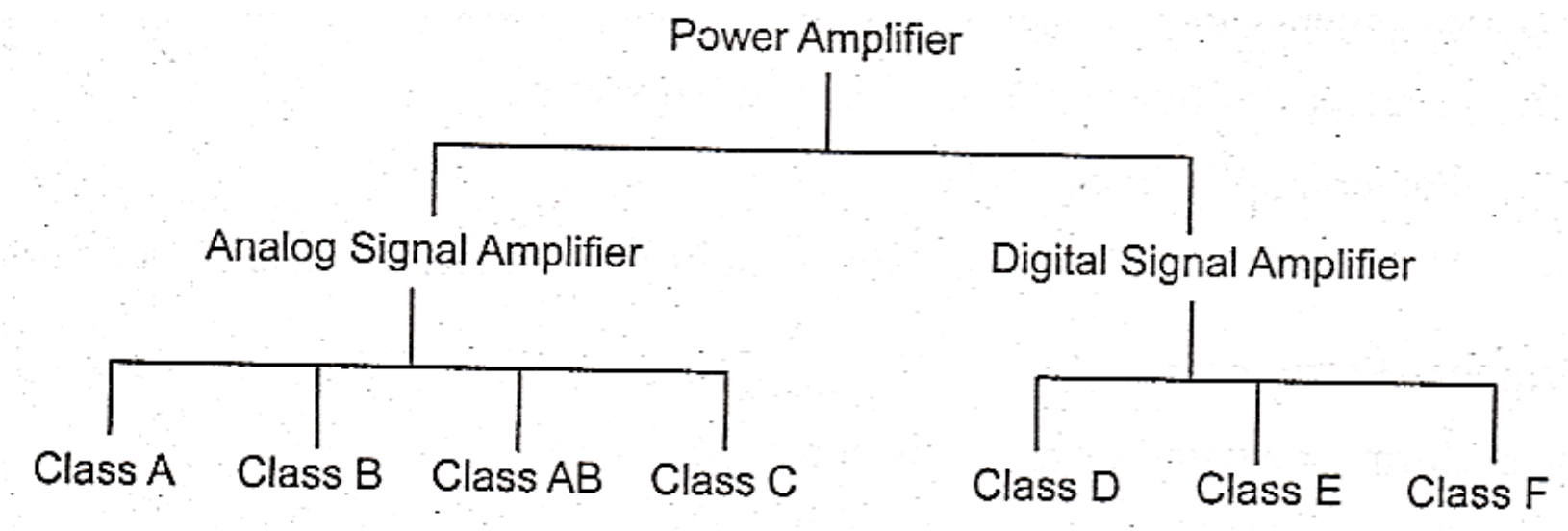

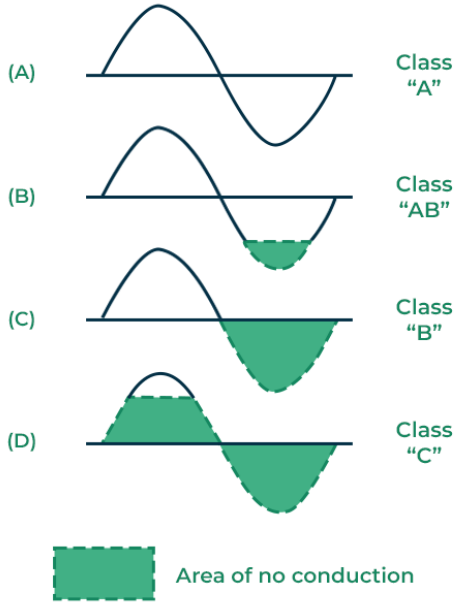

PA Classes of Operation

Class	Linearity	Conduction Angle	ϵ_P Ideal	Practical	Typical Uses
A	Linear	360°	$\ll 50\%$		Rare as PA
A	Quasi-linear	360°	50%	$\approx 35\%$	SSB, High-order QAM
AB	Quasi-linear	180°–360°	50–78%	35-60%	AM, Low-order digital
B	Quasi-linear	180°	78%	$\approx 60\%$	SSB
C	Non-linear	$\leq 180°$	100%	$\approx 75\%$	AM,[1] CM[2]
D	Switched[3]	180°	100%	$\approx 75\%$	High-power CM[2]
E	Switched[3]	$\approx 180°$	100%	$\approx 90\%$	Low-power CM[2]
F	Non-linear	$\approx 180°$	$\approx 100\%$	$\approx 80\%$	UHF and higher CM[2]

[1] Amplitude modulation by varying bias voltage.
[2] Constant modulus; e.g., FM, MSK.
[3] To be clear, definitely non-linear.

Class A power Amplifier

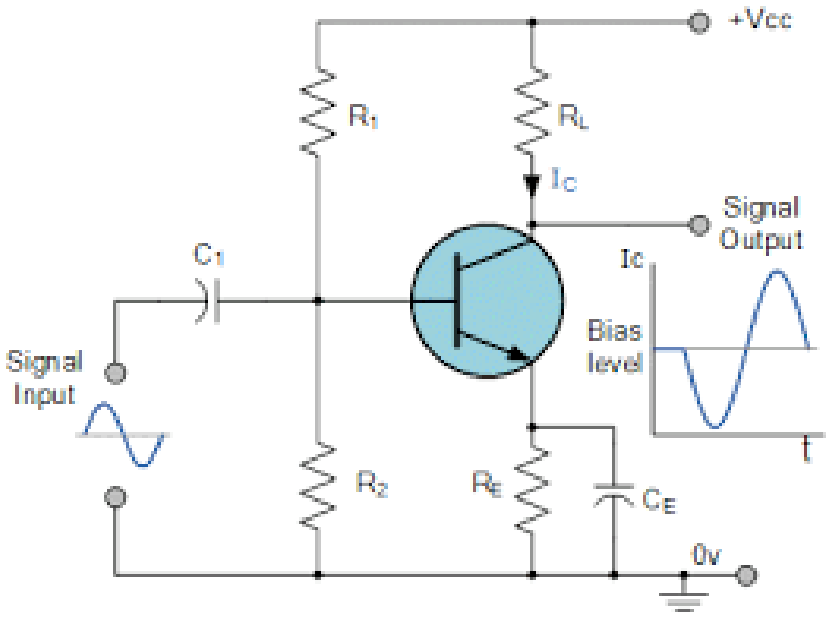

- Operating point is selected in the center of the active region.
- Transistor operates in the active region for full input signal.
- Transistor does not operate in cut-off and saturation region.
- Transistor conducts for full input signal (360°).

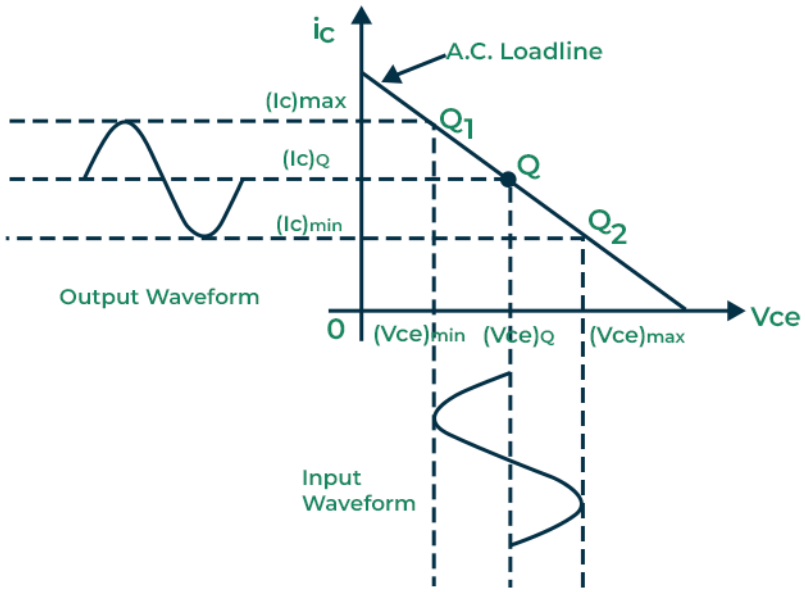

$I_{BQ} = (V_{CC} - 0.7)/R_B$

$I_{CQ} = \beta I_{BQ}$

$V_{EQ} = V_{CC} - I_{CQ} R_L$

Q point at (V_{CEQ}, I_{CQ})

$P_{dc} = V_{CC} I_{CQ}$

$P_{ac} = ((V_{max} - V_{min})(I_{max} - I_{min}))/8$

Efficiency $\%\eta = (P_{ac} / P_{dc}) * 100$

Power dissipation $P_d = P_{dc} - P_{ac}$

Class A power Amplifier: transformer coupled

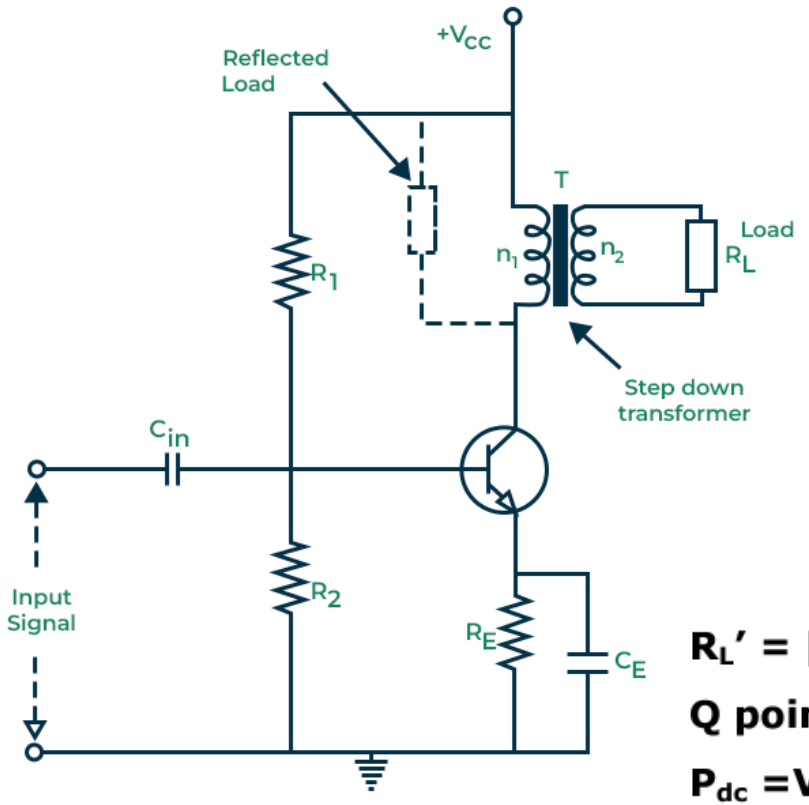

$R_L' = [N_1/N_2]^2 R_L$

Q point (V_{CC}, I_{CQ}), $I_{CQ} = \beta I_{BQ}$

$P_{dc} = V_{CC} I_{CQ}$

$P_{ac} = ((V_{max} - V_{min})(I_{max} - I_{min}))/8$

Efficiency $\%\eta = (P_{ac}/P_{dc}) * 100$.

$\%\eta$ max = 50%

Power dissipation $P_d = P_{dc} = V_{CC} I_{CQ}$

Impedance matching is possible

Slope of dc load line ideally ∞

- This configuration can offer excellent linearity and power gain.
- Due to the transformer primary coil's extremely low resistance, there is less dc power loss. The relationship between the primary and secondary values of voltage, current and impedance are summarized as:

$$\frac{N_1}{N_2} = \frac{V_1}{V_2} = \frac{I_2}{I_1}$$

$$\left(\frac{N_1}{N_2}\right)^2 = \frac{Z_1}{Z_2} = \frac{Z_1}{R_L}$$

N_1 and N_2 are the number of turns in primary and secondary windings, and V, I and Z represent the voltage, current and impedance, respectively with the notation having similar means.

Class B power Amplifier

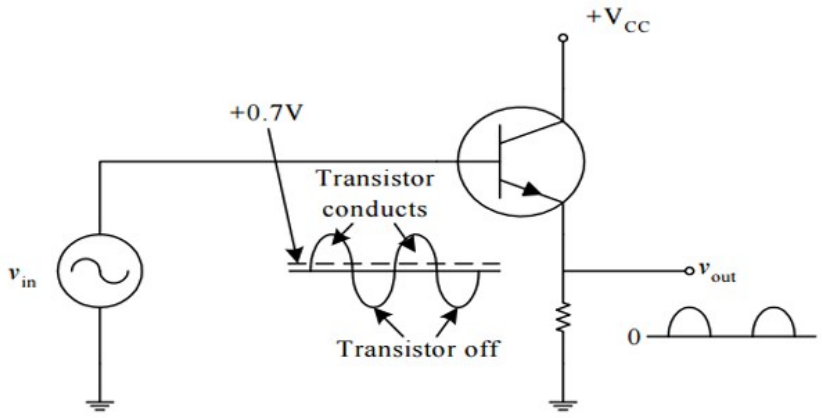

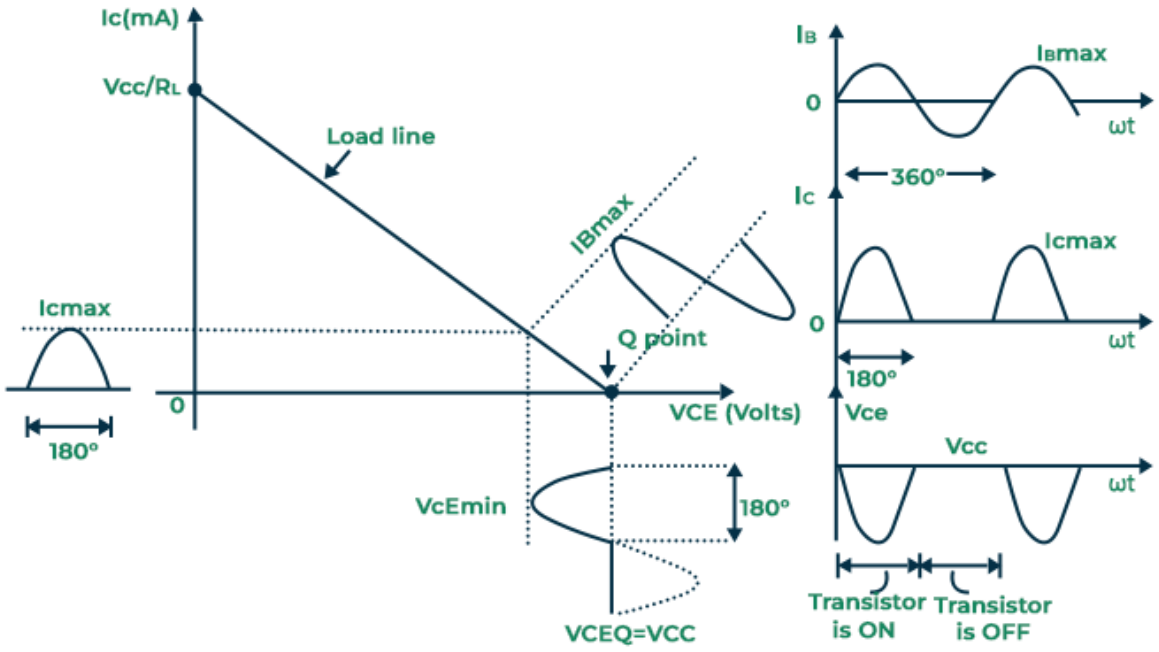

- Conducts for 180° only. So, Q-point is adjusted in cut-off region.
- Thus, power dissipation is less and efficiency is increased.

Advantages:

- Second harmonic gets automatically cancelled.
- Zero power dissipation.
- High efficiency compared with class A amplifiers.

Disadvantages:

Crossover distortion is present because of operating near cut-off region.

Efficiency is not so much high.

Class B: classification

1. Push-pull amplifier (two transistors of same type)
2. Complimentary symmetry amplifier (two transistors of different type NPN and PNP)

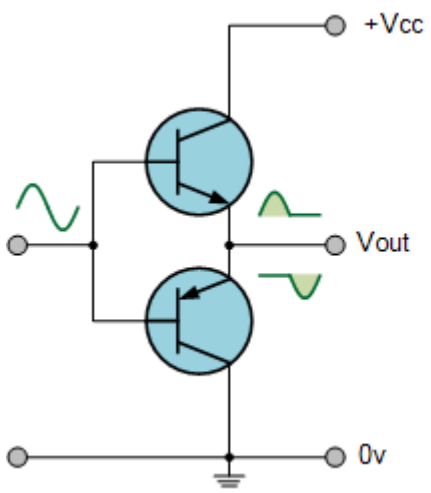

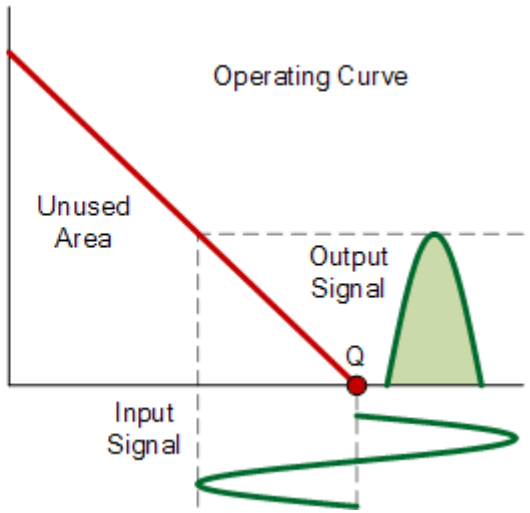

Class B: Push-Pull amplifier

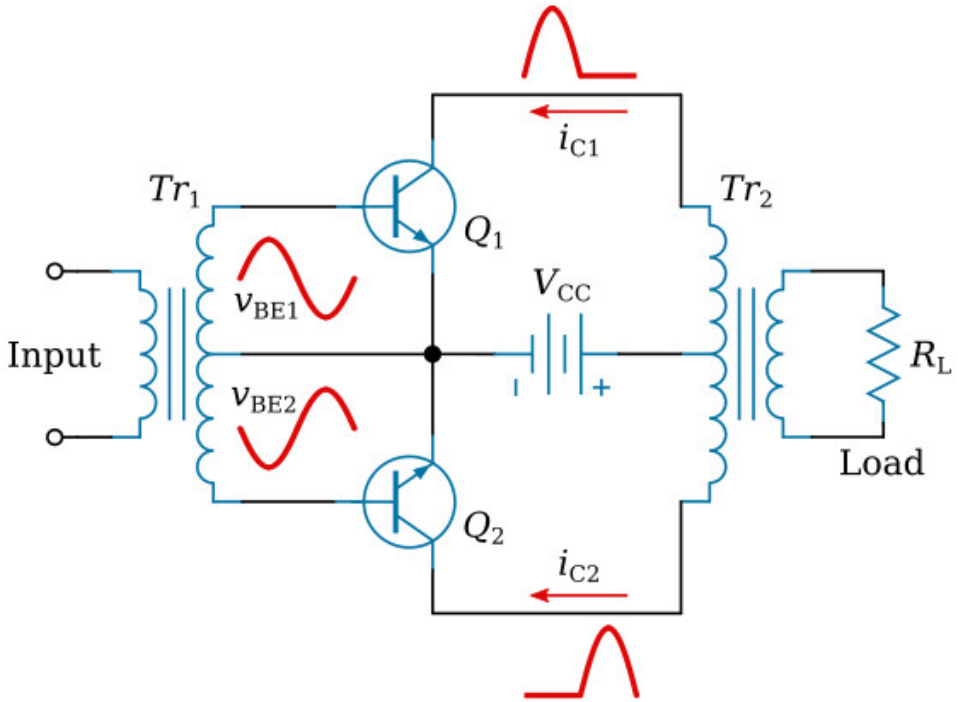

Q point at (V_{CC} ,0)

$R_L' = [N_1/N_2]^2 R_L$

$P_{dc} = (2V_{CC} I_m)/\pi$

$P_{ac} = (V_m I_m)/2$

$\%\eta = \pi/4 (V_m/V_{CC}) * 100$

$\%\eta$ max $= 78.5\%$

$P_d = P_{dc} - P_{ac}$

$P_{d\,(max)} = 2 V^2_{cc}/\pi^2 R_L'$

Advantage:

- Efficiency is much higher than Class A amplifier.
- Harmonics are cancelled so less harmonic distortion.
- Ripples in supply voltage are eliminated.

Disadvantage:

- Necessity of two center tap transformers.
- Poor frequency response with costly and bulky circuit.

Class AB Power Amplifier

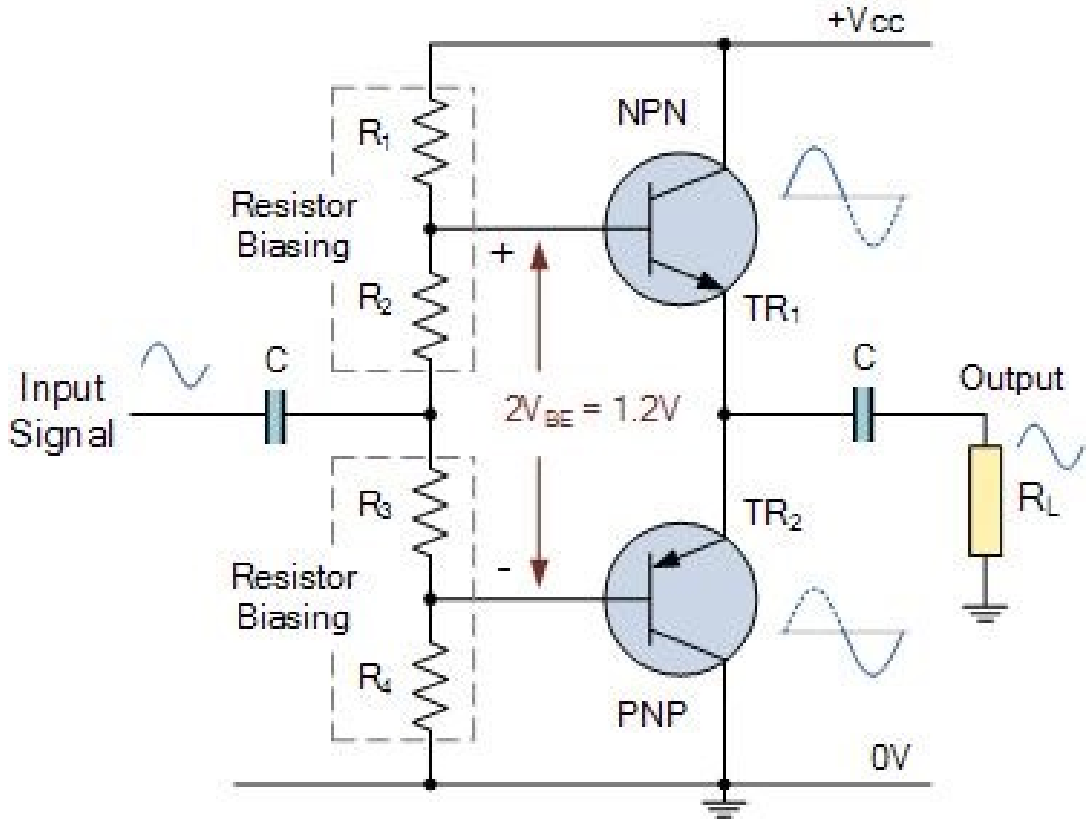

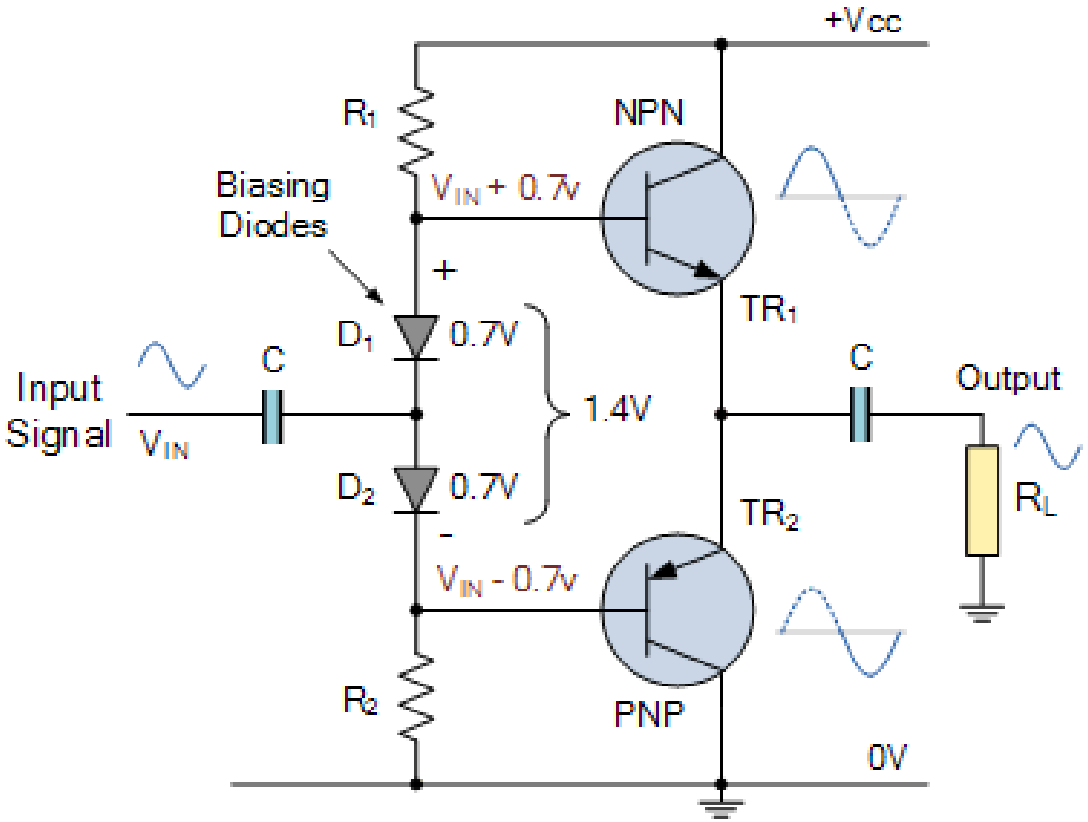

Biasing is used to move the Q point of transistor above the cut-off region.

Diode biasing is used to stabilize the Q point.

Class B: complimentary symmetry amplifier

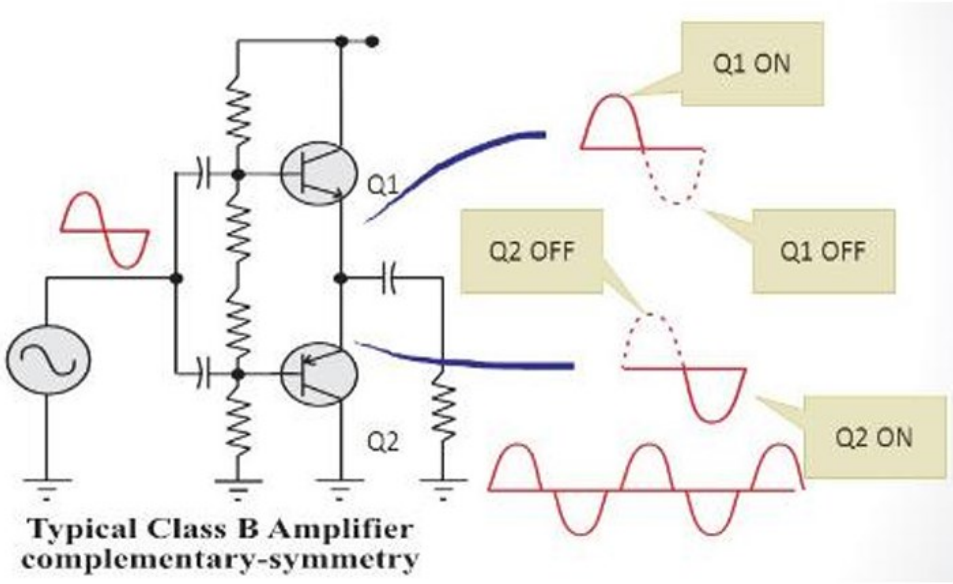

Analysis:

Note: All results for push pull amplifiers are applicable for complementary symmetry model. Only change is replace R_L' with real load R_L value. (Since, no output transformer is used).

Advantages:

- As transformer less circuit the weight and cost is less
- Due to common collector (emitter follower) impedance matching is possible.
- Frequency response is good.
- Value of efficiency is higher than push pull amplifier.

Disadvantage:

- Circuit needs two separate voltage supplies.
- Output is distorted due to crossover Distortion.
- It is necessary that both transistors Q1 & Q2 have matched characteristics.

Comparison of Push Pull & Complementary Symmetry circuits:

S No	Parameter	Push Pull	Complementary symmetry
1	Type of Transistor	Both should be of NPN or PNP type	One is PNP and other NPN
2	Use of transformers	Used at both i/p & o/p side	Not needed
3	Impedance matching	Possible due to use of two transformers	Possible due to operation of transistors in CC configuration
4	Transistor Configuration	Both transistors Operates in CE mode	Both transistors Operates in CC mode
5	Conduction Angle	180°	180°
6	Power dissipation when no input is present	Zero	Zero
7	Efficiency	Low	Higher than Push Pull type.

Class C Power Amplifier

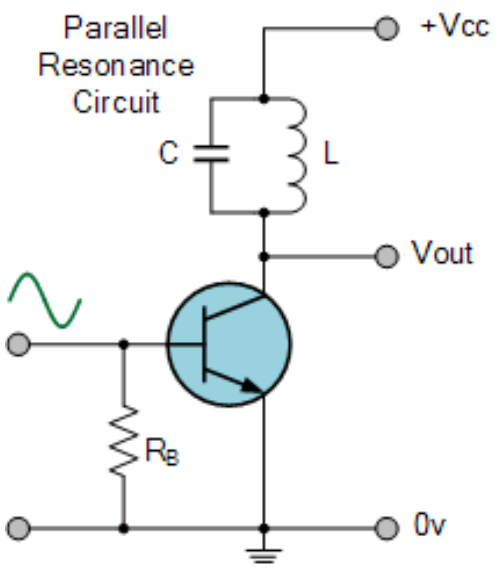

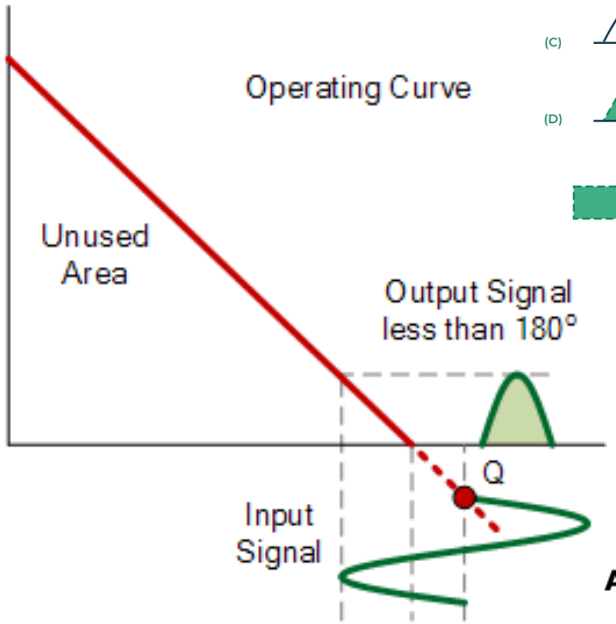

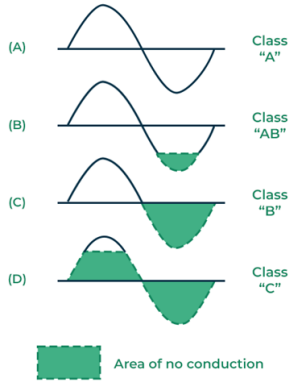

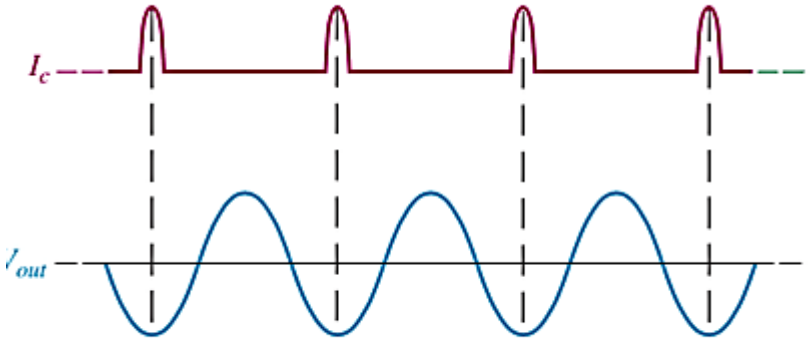

b) Output waveforms

- Transistor conducts for 80° to 120°. This enhances the efficiency but increases the distortion. This is not used in audio applications.

Advantages:

- Less Physical size.
- Used in RF applications.
- High Efficiency (higher than 95%)
- Low power loss in power transistors

Disadvantage:

- Creates lot of RF Interference.
- Selection of ideal Inductors is problem.
- Not suitable in Audio applications.

Applications: Tuned amplifiers, RF amplifiers, oscillators, Booster amplifiers, and High Frequency repeaters.